BOLIN TECHNOLOGY

QR-BM Outdoor PTZ Mounting Base

Installation Guide

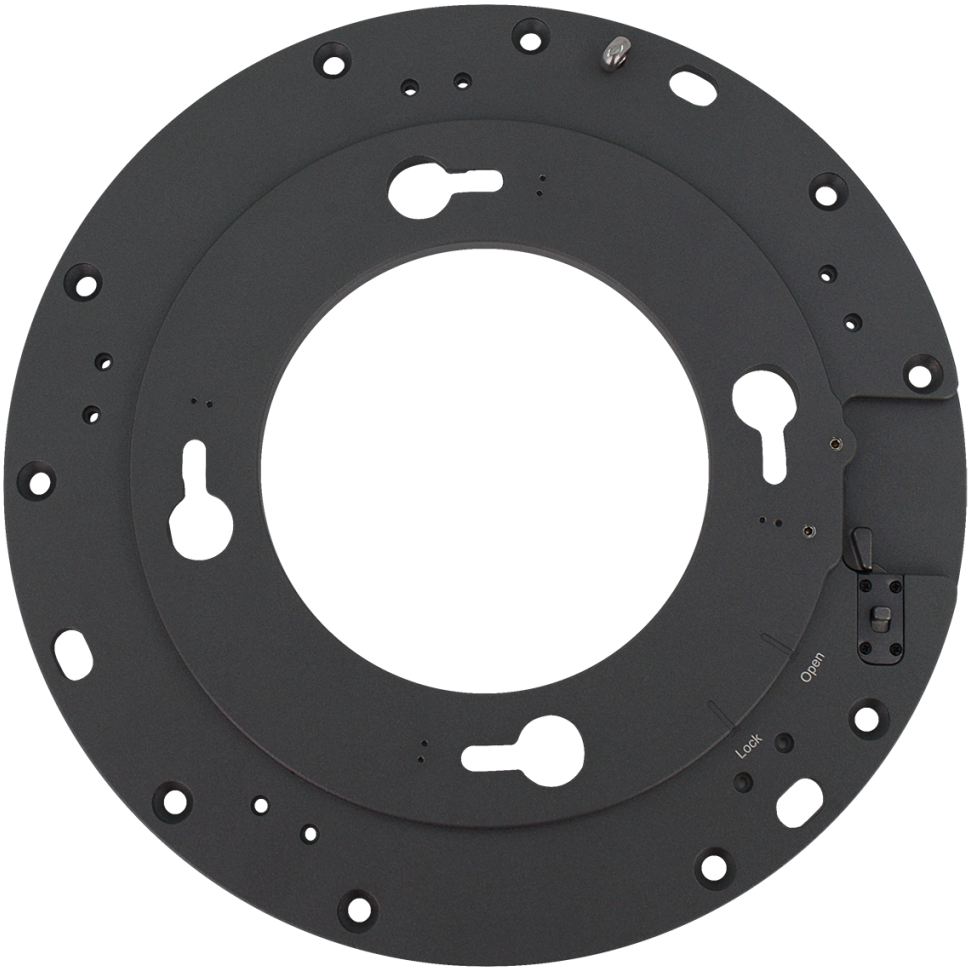

	
Top View	Bottom View
	

Step-by-step guide for installing the Outdoor PTZ Mounting Base:

Step 1: Fasten the QR-BM onto a flat surface by screwing it in place.

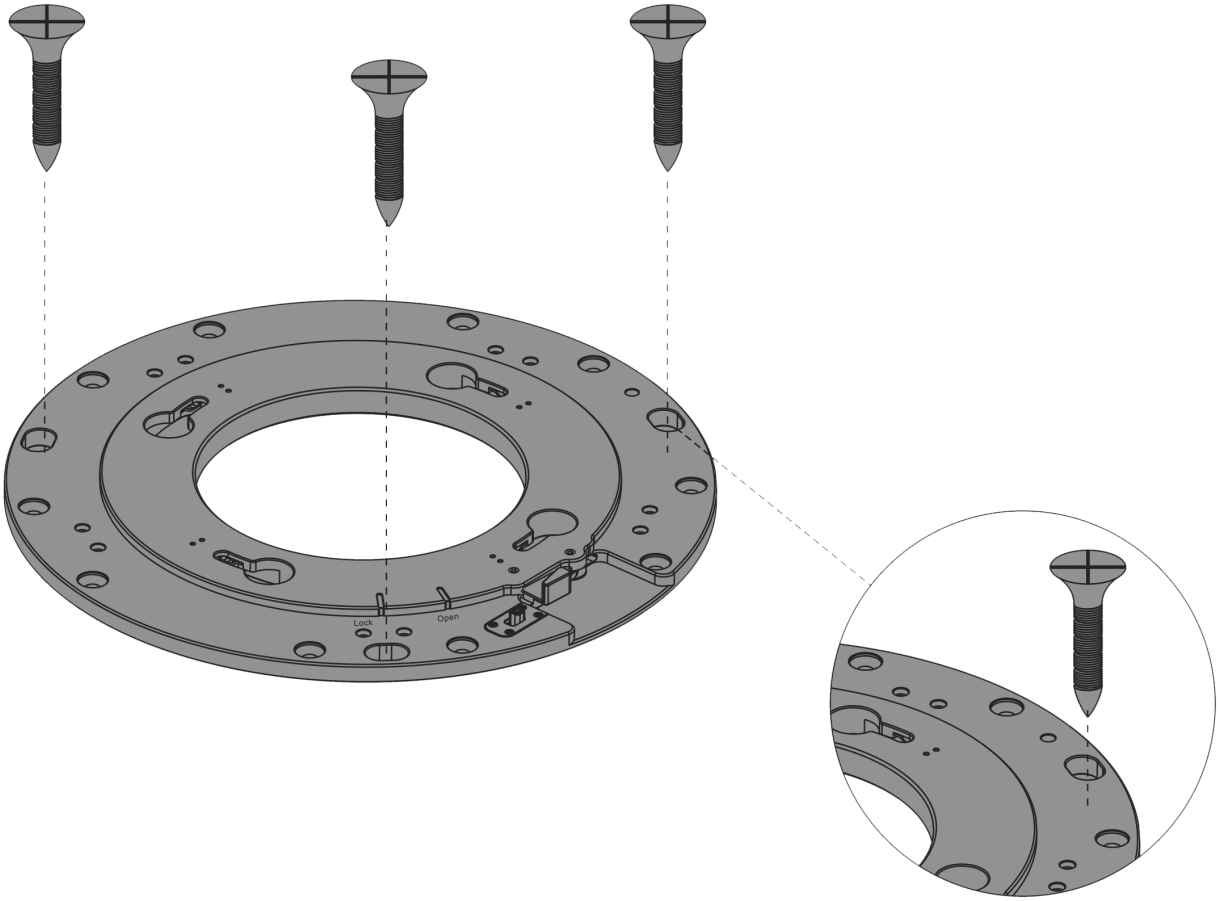

Step 2: Slide the buckle to the left and swing the fixed lever to the right.

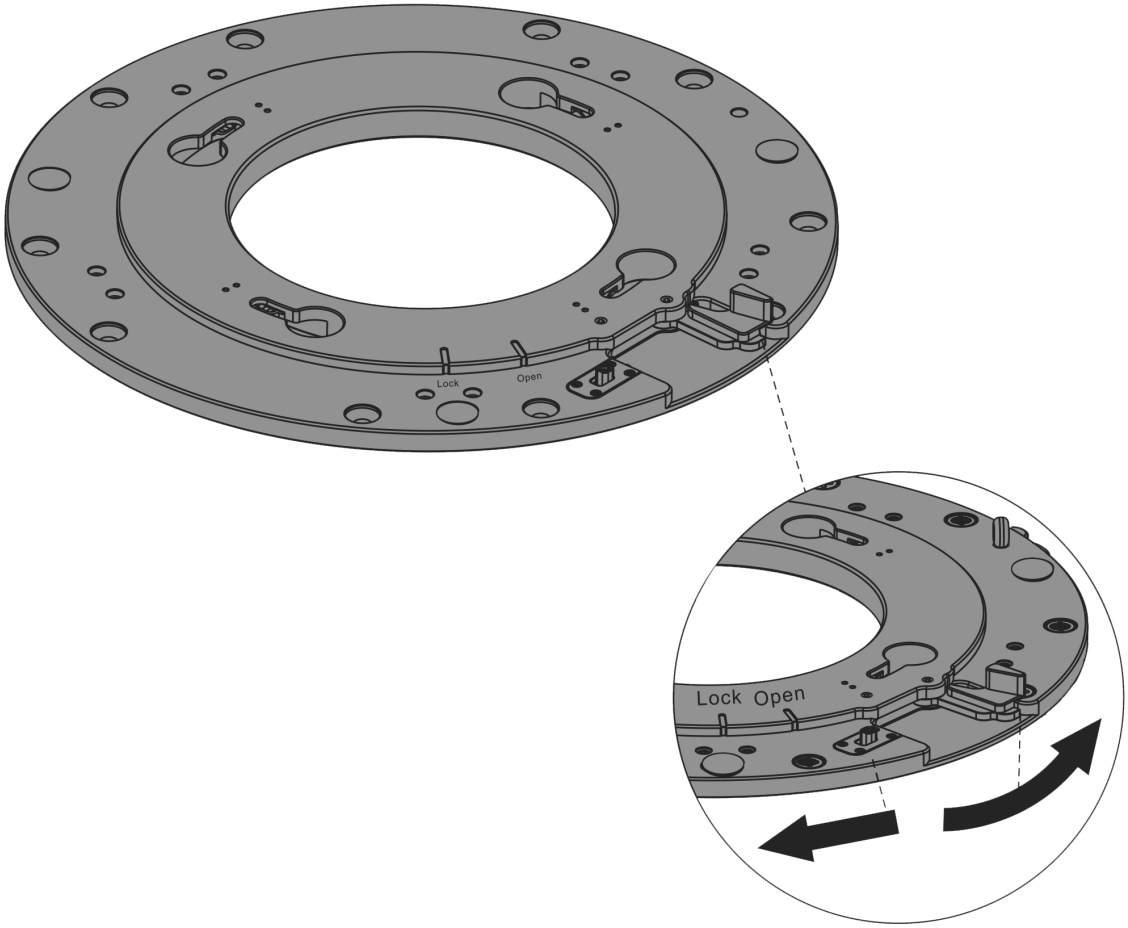

Step 3: Secure the screws into the camera’s base.

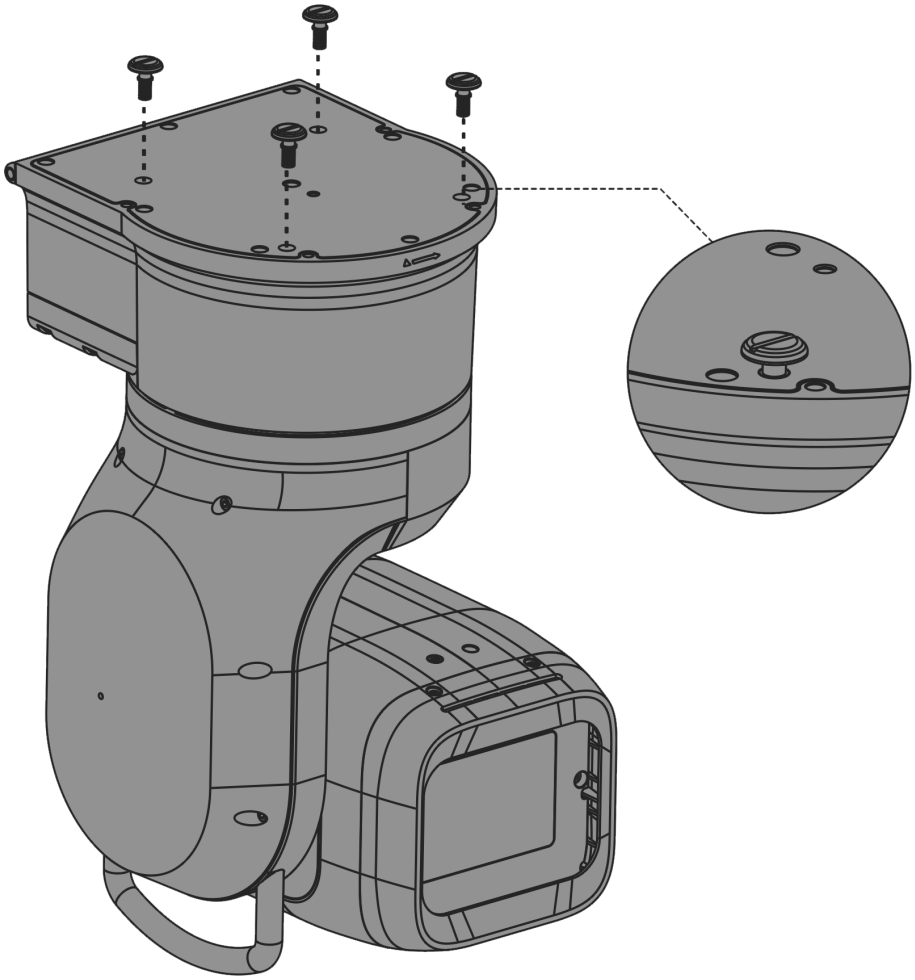

Step 4: Position the triangle mark on the camera to align with the ‘Open’ indicator on the QR-BM Plate, then rotate to secure it in place.

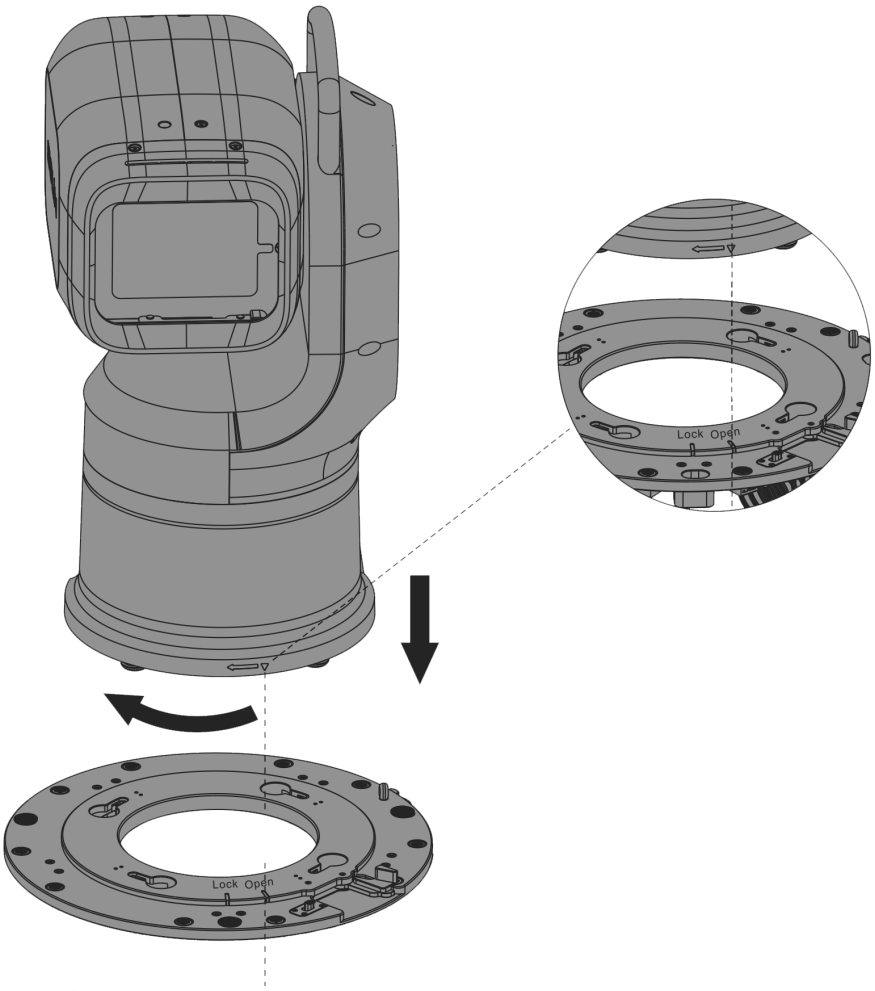

Step 5: Lock the fixing lever.

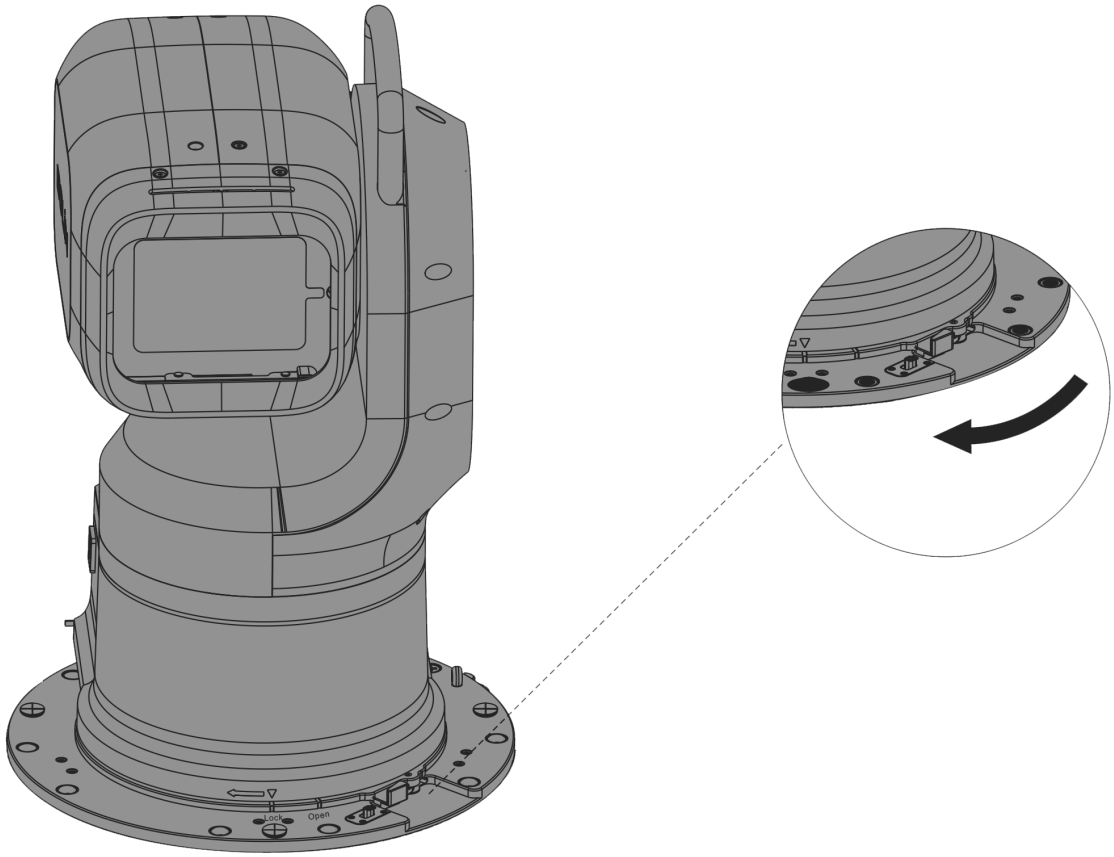

Step 6: Thread the cables through the Flexible Conduit Sleeve, the waterproof grommet, and into the waterproof case.

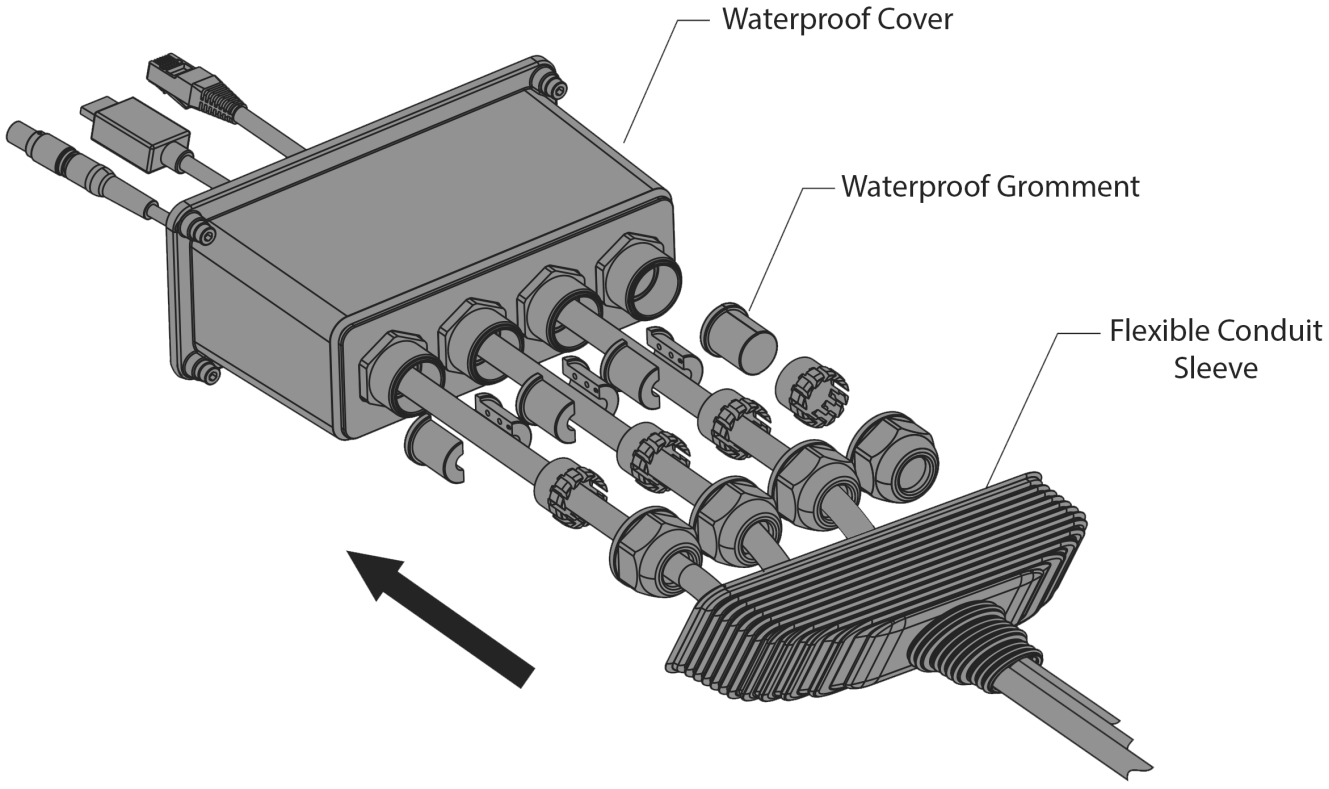

Step 7: Connect the cables to the cameras.

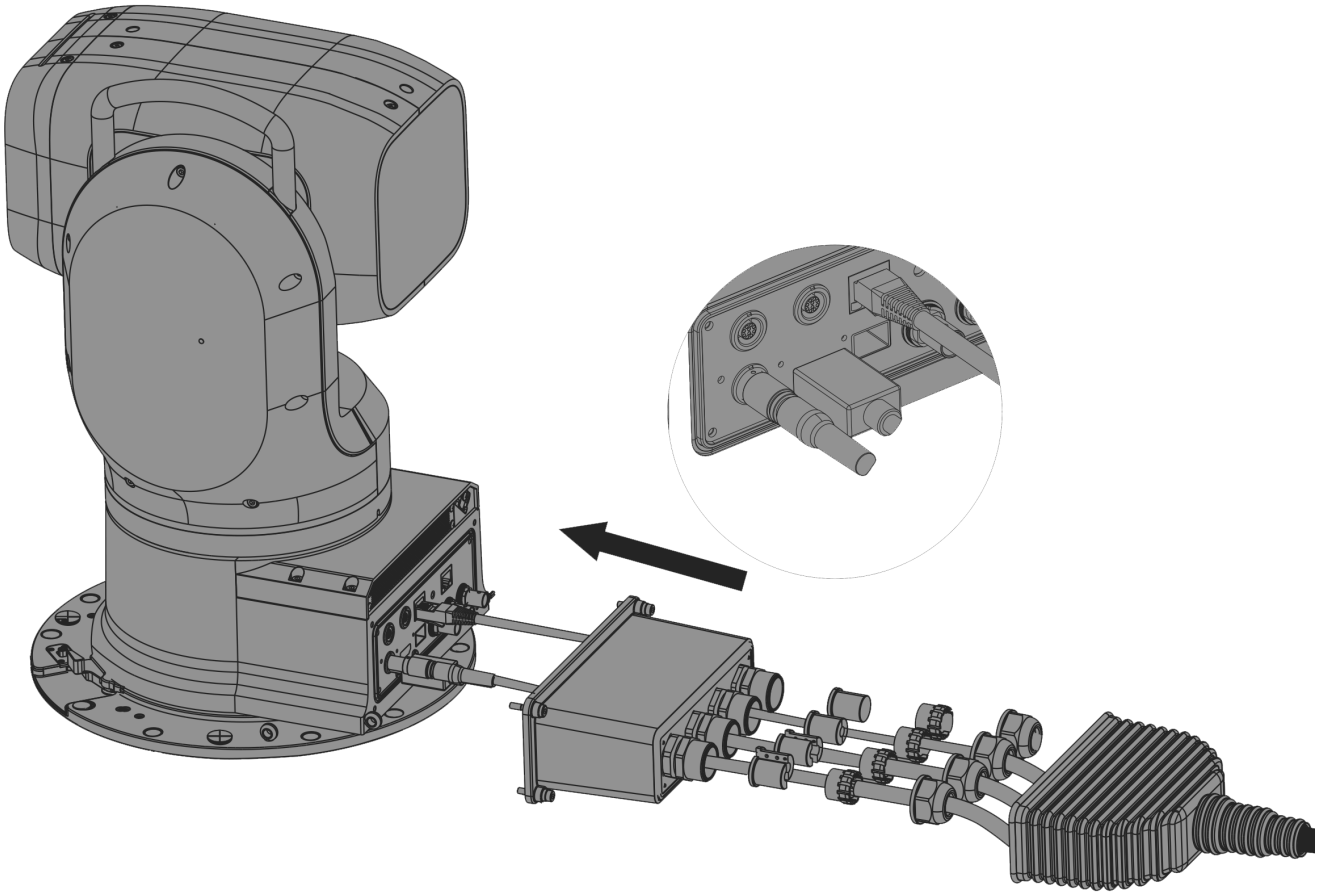

Step 8: Fasten the four screws to connect the waterproof cover to the camera and twist each cap to fully seal the grommet around the cable.

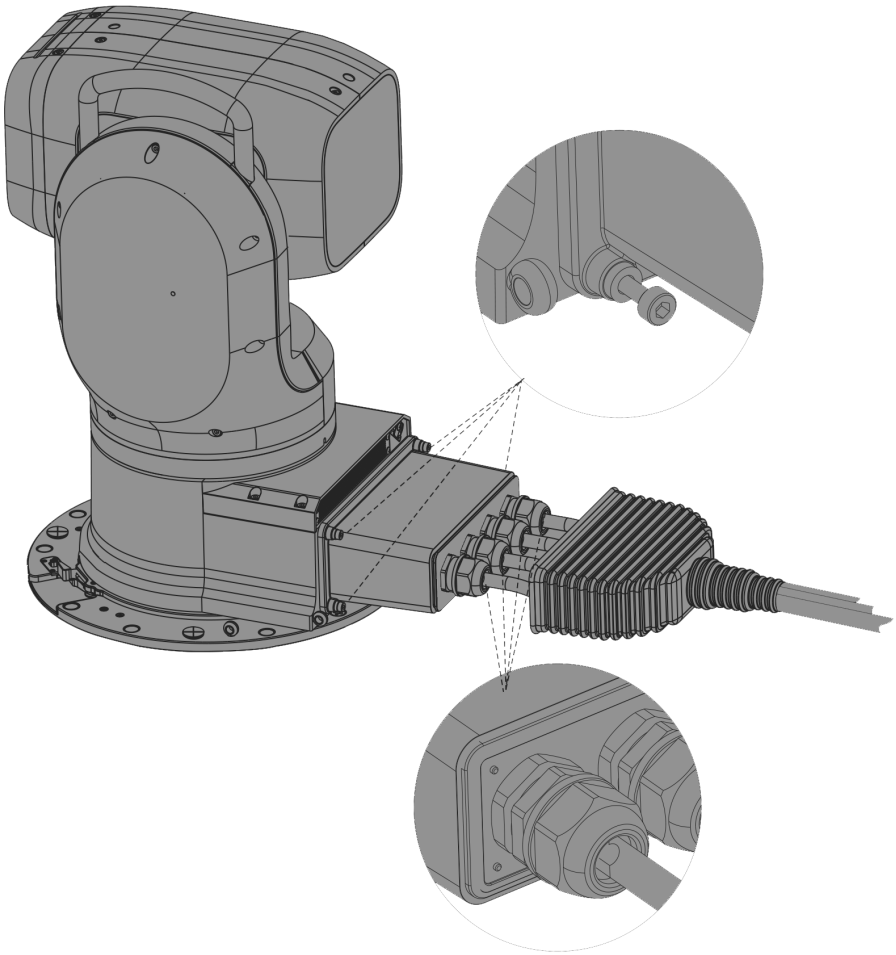

Step 9:
1: Fold the flexible conduit sleeve around the outside of the waterproof case.
2: Secure the Safety Cable.

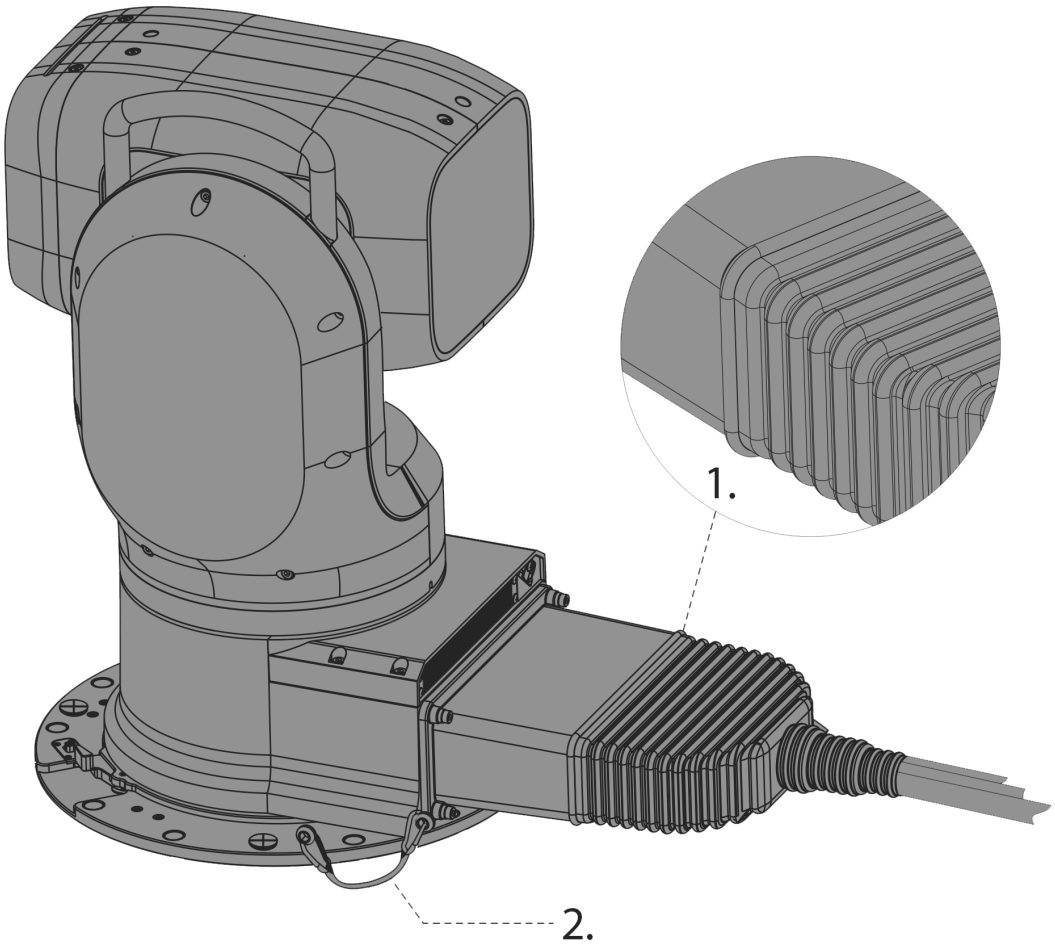
1.
2.